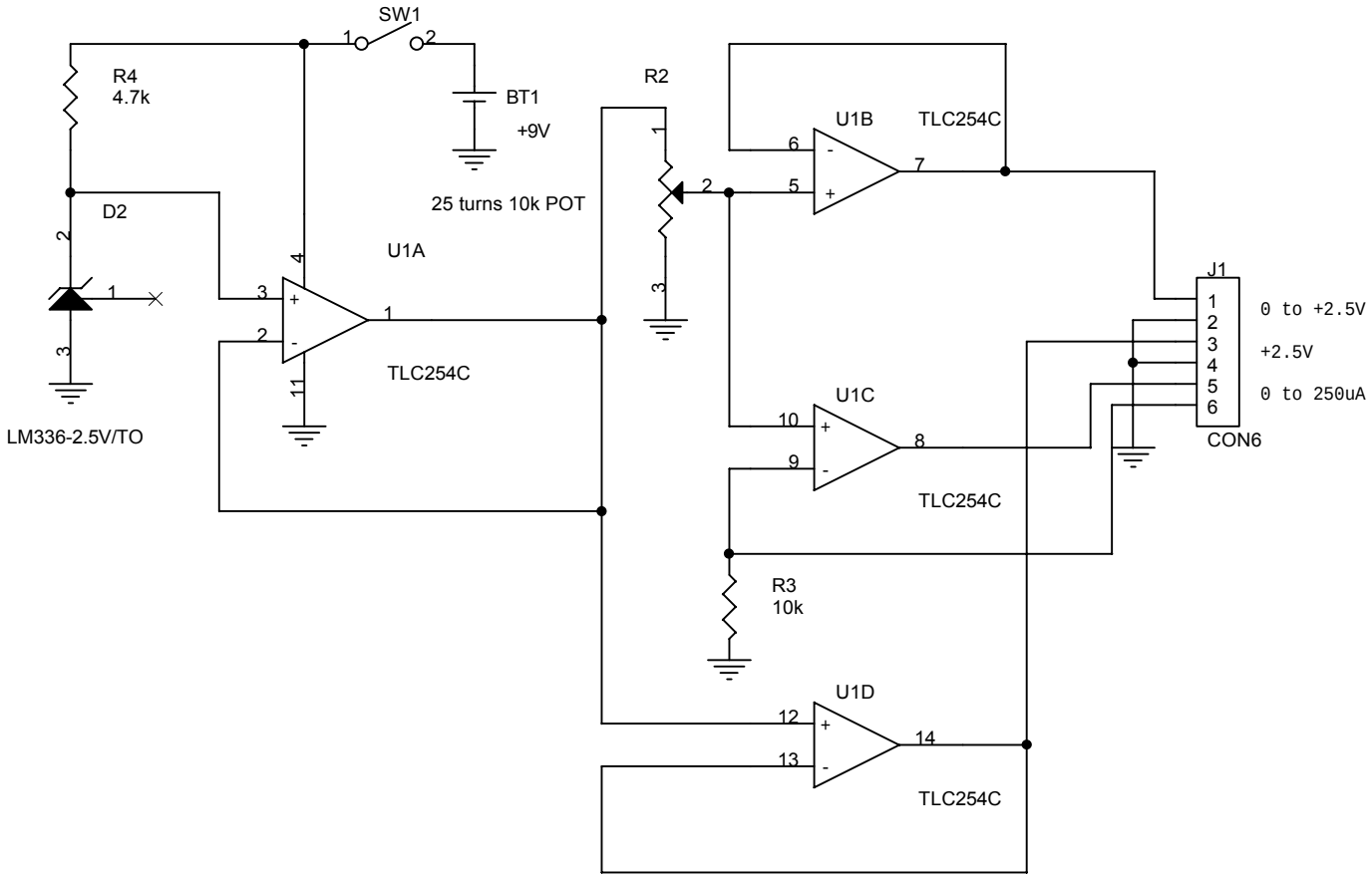

Title	+2.5V and 0-250uA DC Source	
Size A	Document Number <Doc>	Rev 1
Date: Sunday, August 28, 2005	Sheet 1 of 1	