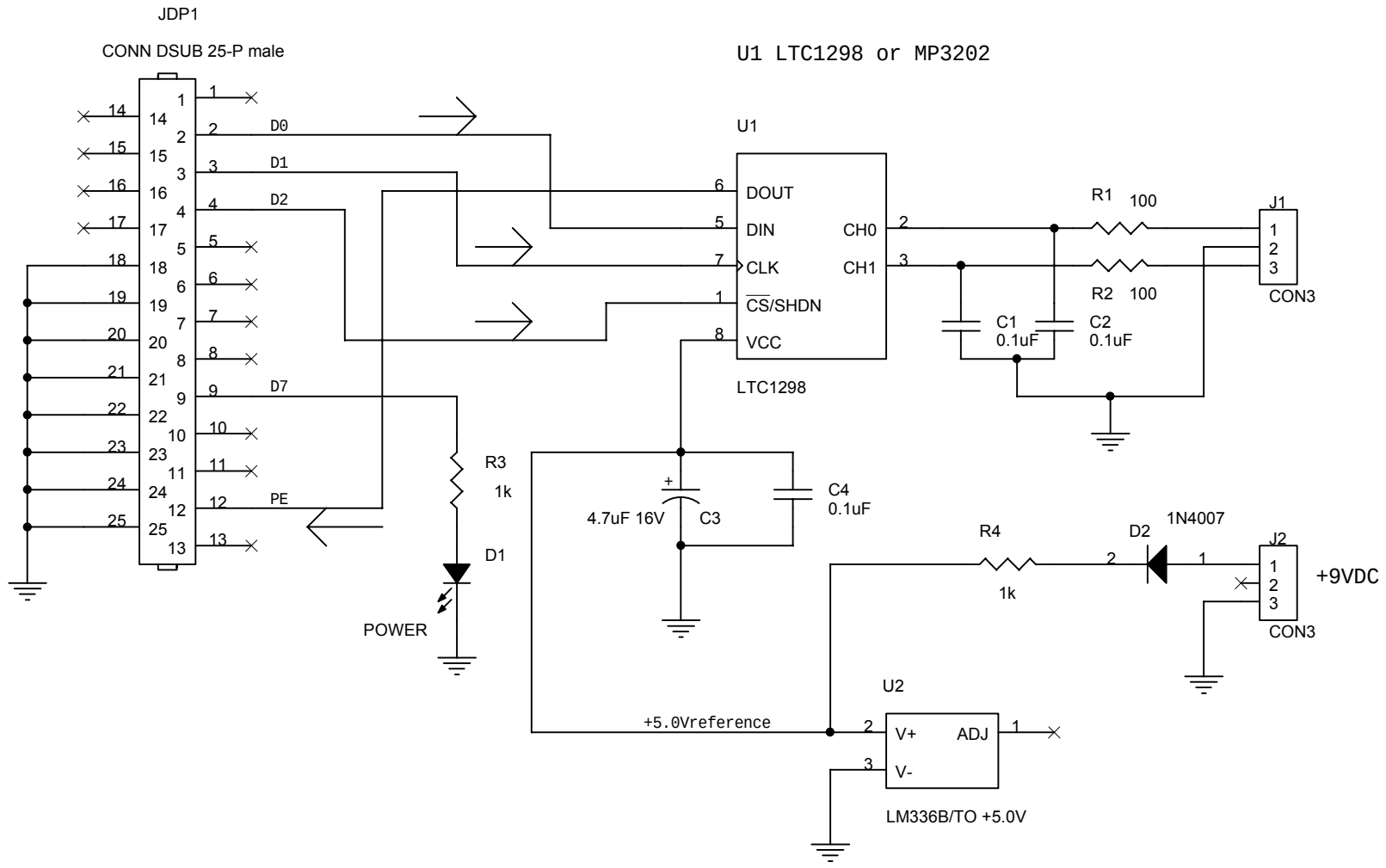

Title	LPT port ADC Board (LTC1298 MP3202)	
Size A	Document Number <Doc>	Rev 1
Date: Sunday, December 05, 2004	Sheet 1 of 1	